BOBRICK

Technical Data

# GLASS MIRROR WITH STAINLESS STEEL ANGLE FRAME

# B-290 SERIES



**Designer's Notes:**

1. Special-order sizes available on request.
2. Maximum size one-piece angle-frame mirror, 144" x 72" (366 x 183cm); minimum size, 12" x 12" (30 x 30cm). Maximum frame size available, 180" x 72" (457 x 183cm) with two pieces of glass in one-piece frame. Stainless steel I-section with polished finish covers seam where two pieces of glass butt together.
3. All Bobrick framed mirrors are manufactured to overall width and height dimensions. EXAMPLE: A 24" x 36" (61 x 91cm) mirror will be furnished 24" x 36" (61 x 91cm) outside-of-frame to outside-of-frame.
4. To specify special sizes use Series Number followed by width then height in inches. EXAMPLE: B-290 2024.
5. Bobrick framed mirrors are manufactured to a tolerance ± 1/8" (3.2mm).
6. For sufficient space to lift mirror onto wall hanger(s), provide 3-1/4" (85mm) minimum clearance above center line of mounting screw holes.

## Snap Locking Design

## (Rear View)

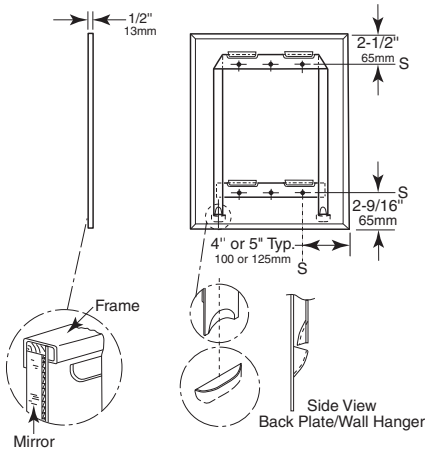


*Figure: 1*

**STANDARD B-290 SERIES MIRRORS**

| MODEL NO. | OVERALL SIZE W | H |
|---|---|---|
| B-290 1830 | 18" (46cm) | 30" (76cm) |
| B-290 1836 | 18" (46cm) | 36" (91cm) |
| B-290 2430 | 24" (61cm) | 30" (76cm) |
| B-290 2436 | 24" (61cm) | 36" (91cm)) |

## Lock Tab Design

## (Rear View)

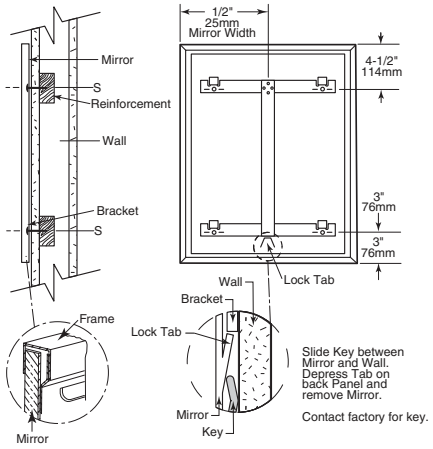


*Figure: 2*

**STANDARD B-290 SERIES MIRRORS**

| MODEL NO. | OVERALL SIZE W | H |
|---|---|---|
| B-290 2448 | 24" (61cm) | 48" (122cm) |
| B-290 2460 | 24" (61cm) | 60" (152cm) |
| B-290 2472 | 24" (61cm) | 72" (183cm)) |

**All Other Size Mirrors**

## MATERIALS:

**Frame** — 18-8, heavy-gauge stainless steel, 3/4" x 3/4" (19 x 19mm) angle with satin finish. One-piece, roll-formed construction forms continuous integral stiffener on all sides. Bevel design on front of angle holds frame tightly against mirror. Corners of mirror frame are heliarc welded, ground and polish smooth. Galvanized steel back is fastened to frame with concealed screws and equipped with integral horizontal hanging brackets near the top and bottom of the mirror for hanging the mirror and to prevent the mirror from pulling away from the wall. Locking devices secure mirror to concealed wall hanger.

**Mirror** — No. 1 quality, 1/4" (6mm) select float glass (standard glass): selected for silvering, electrolytically copper-plated by the galvanic process, and guaranteed for 15 years against silver spoilage. All edges protected by plastic filler strips; back is protected by full-size, shock-absorbing, water-resistant, nonabrasive, 3/16" (5mm) thick polyethylene padding.

**Concealed Wall Hanger** — Fabricated of galvanized steel. Incorporates lower support member, which engages lower backplate louvers to keep bottom of mirror against wall.

continued . . .

The illustrations and descriptions herein are applicable to production as of the date of this Technical Data Sheet.
The manufacturer reserves the right to, and does from time to time, make changes and improvements in designs and dimensions.

Rev. 3/6/15 R/B Printed in U.S.A.
© 2015 by Bobrick Washroom Equipment, Inc.

**INSTALLATION:**

Mount wall hanger on wall with screws (not furnished) at points indicated by an *S*. For plaster or dry wall construction, provide backing to comply with local building codes, then secure wall hanger with screws (not furnished). When providing a concealed backing, allow backing to cover range of mounting hole locations shown on drawing. For other wall surfaces, provide fiber plugs or expansion shields for use with screws (not furnished), or provide 1/8" (3mm) toggle bolts or expansion bolts. Hang mirror on wall hanger with all four backplate louvers engaged behind horizontal wall hanger members. To do this, mirror must be centered in front of the wall hanger horizontally, pressed flat against the wall approximately 1" (25mm) above final position and then lowered into final position.

**Snap Locking Design —** Locking devices automatically secure mirror to concealed wall hanger when it is lowered into final position (see figure 3). Locking devices may be unlocked by inserting two flat blade screwdrivers behind each side of mirror near the bottom or under the bottom of the mirror and pulling mirror bottom forward and then up.

**Lock Tab Design —** Locking devisec automatically secure mirri to concealed wall hanger when it is lowered into final position (see figure 5). Locking device may be unlocked by sliding Key between mirror and wall and depressing tab on back panel. If key is required, please the factory.

**Snap Locking Design**

**(Front View)**

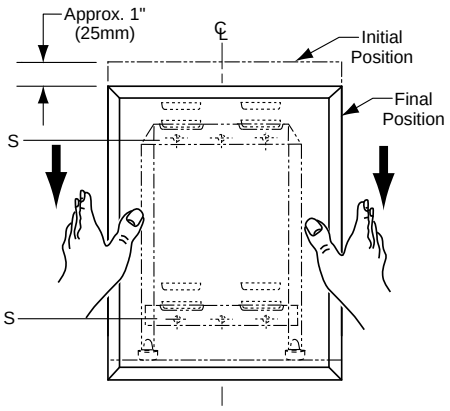


*Figure: 4*

**Lock Tab Design**

**(Front View)**

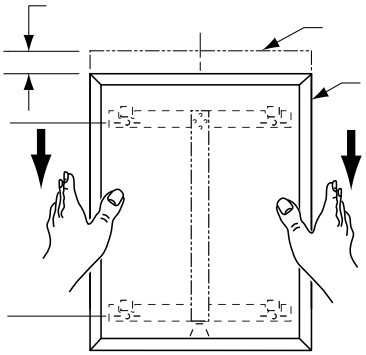

*Figure: 5*

**SPECIFICATION:**

Mirror shall have a one-piece, stainless steel angle frame, 3/4" x 3/4" (19 x 19mm) with continuous integral stiffener on all sides and beveled front to hold frame tightly against mirror; corners shall be heliarc welded, ground, and polished smooth; all exposed surfaces shall have satin finish. Reflective surfaces shall be guaranteed for 15 years against silver spoilage. All edges shall be protected by plastic filler strips and the back shall be protected by full-size, shock-absorbing, water-resistant, nonabrasive, 3/16" (5mm) thick polyethylene padding. Galvanized steel back shall have integral horizontal hanging brackets located at top and bottom for mounting on concealed wall hanger and to prevent the mirror from pulling away from the wall. Locking devices secure mirror to concealed wall hanger. Mirror shall be removable from wall hanger for reglazing mirror.

**Framed Mirror shall be Model B-290 _____ (insert width and height) of Bobrick Washroom Equipment, Inc., Clifton Park, New York; Jackson, Tennessee; Los Angeles, California; Bobrick Washroom Equipment Company, Scarborough, Ontario; Bobrick Washroom Equipment Pty. Ltd., Australia; and Bobrick Washroom Equipment Limited, United Kingdom.**

The illustrations and descriptions herein are applicable to production as of the date of this Technical Data Sheet.
The manufacturer reserves the right to, and does from time to time, make changes and improvements in designs and dimensions.

B-290 Rev. 3/6/15 R/B Printed in U.S.A.
© 2015 by Bobrick Washroom Equipment, Inc.