SURFACE-MOUNTED PAPER TOWEL DISPENSER

B-263



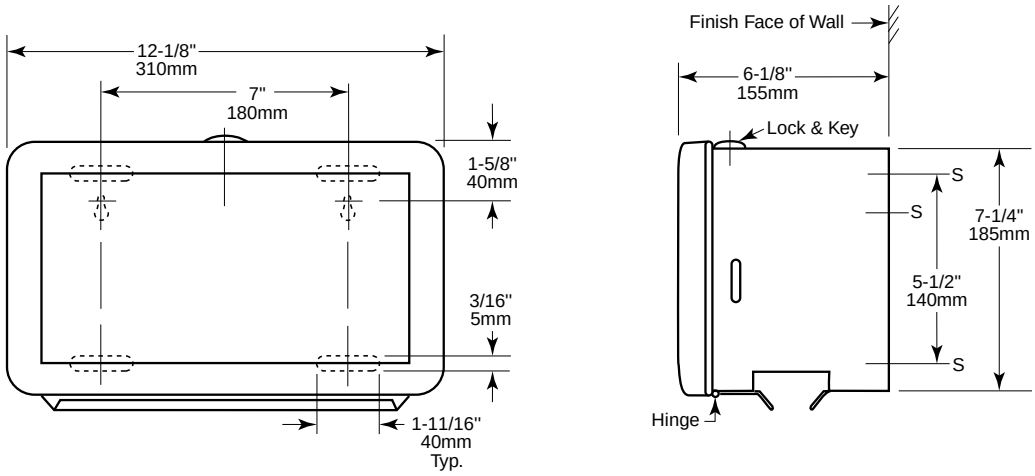

MATERIALS:

Cabinet — 18-8, type-304, 22-gauge (0.8mm) stainless steel with satin finish. Welded construction. Equipped with a tumbler lock keyed like other Bobrick washroom accessories.

Door — 18-8, type-304, 22-gauge (0.8mm) stainless steel with satin finish. Secured to cabinet with a full-length stainless steel piano-hinge.

OPERATION:

Dispenses singlefold paper towels. Slot in sides of cabinet indicate refill time. Capacity: 400 singlefold paper towels.

INSTALLATION:

Mount unit on wall with #8 x 1-1/4" (4.2 x 32mm) sheet-metal screws, (not furnished) at points indicated by an *S*. For plaster or dry wall construction, provide concealed backing to comply with local building codes and secure with sheet-metal screws. For other wall surfaces, provide fiber plugs or expansion shields for use with sheet-metal screws or provide 1/8" (3mm) toggle bolts or expansion bolts.

SPECIFICATION:

Surface-mounted paper towel dispenser shall be type-304 stainless steel with satin finish. Door shall be secured to cabinet with a full-length stainless steel piano-hinge. Cabinet shall be equipped with a tumbler lock keyed like other Bobrick washroom accessories. Unit shall accommodate 400 singlefold paper towels.

Surface-Mounted Paper Towel Dispenser shall be Model B-263 of Bobrick Washroom Equipment, Inc., Clifton Park, New York; Jackson, Tennessee; Los Angeles, California; Bobrick Washroom Equipment Company, Scarborough, Ontario; Bobrick Washroom Equipment Pty. Ltd., Australia; and Bobrick Washroom Equipment Limited, United Kingdom.

The illustrations and descriptions herein are applicable to production as of the date of this Technical Data Sheet.
The manufacturer reserves the right to, and does from time to time, make changes and improvements in designs and dimensions.

Revised 06/30/15 Printed in U.S.A.
© 2015 by Bobrick Washroom Equipment, Inc.