BOBRICK

Technical Data

TrimLineSeries™ SURFACE-MOUNTED LIQUID SOAP DISPENSER 1000ML

B-26617



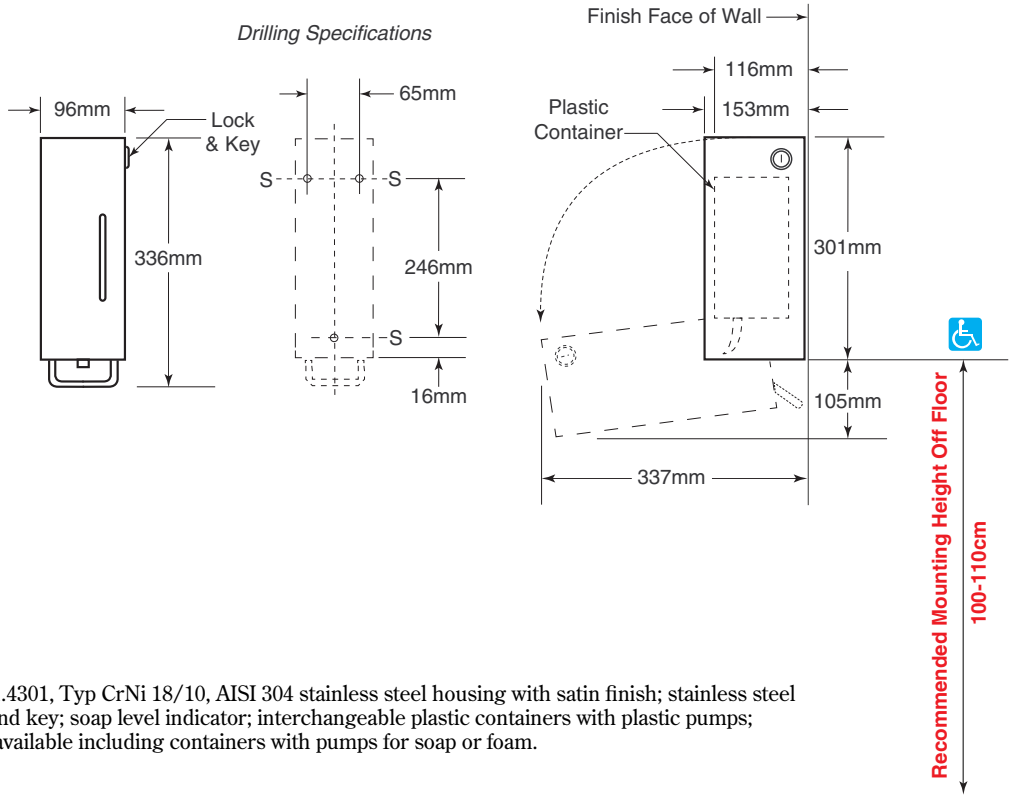

MATERIAL:

Welded, 0.8mm (22 gauge) 1.4301, Typ CrNi 18/10, AISI 304 stainless steel housing with satin finish; stainless steel operating lever; metal lock and key; soap level indicator; interchangeable plastic containers with plastic pumps; variety of plastic containers available including containers with pumps for soap or foam.

OPERATION:

The cover is lockable with a Bobrick System lock. To refill the dispenser, open the cover by lifting and pulling forward. The soap level indicator shows how much product is remaining in the dispenser. The plastic container can be removed and re-installed for quick and easy refilling. The plastic container can be used for soap cartridges available in Europe (up to 1000 ml), as well as bulk refilling of up to 1000 ml of soap. To install a soap cartridge in the dispenser, open the cartridge and place it upside down inside the plastic container. Alternatively, soap can be poured directly into the plastic container. The dispenser has been designed for quick and easy refilling process.

INSTALLATION:

After opening the dispenser cover, remove the plastic container, gently lifting it upwards while pressing the locking latch. Mount the dispenser to the wall by using the enclosed screws and wall plugs. Make sure the wall surface is in good condition to ensure proper mating of the dispenser to the wall. Use silicone or glue pads if necessary.

Note:

1. The dispenser should be installed near or directly above the sink to allow wet hands to drip into the sink.
2. Allow sufficient space above dispenser to exchange cartridges easily.
3. Recommended installation height: 100 – 110 cm (39" - 43") (measured from floor to the bottom of the dispenser).

TECHNICAL SPECIFICATIONS:

Model B-26617 from Bobrick Washroom Equipment, Dispenser made of 0.8 mm thick, (22 gauge) 1.4301, Type CrNi 18/10, AISI 304 stainless steel with a brushed, satin finish; plastic container for soap cartridges (up to 1000 ml), as well as for bulk refill of soap (up to 1000 ml); lockable with a Bobrick System lock; soap level indicator.

CARE INSTRUCTIONS:

Clean regularly with warm water and/or stainless steel cleaner.
Do not use acid (chloride) cleaners or scouring agents.
The suction valve can be cleansed by pumping hot water through it.
Do not dismantle the dispenser.
Use only original spare parts.

Liquid Soap Dispenser shall be Model B-26617 of Bobrick Washroom Equipment, Inc., Clifton Park, New York; Jackson, Tennessee; Los Angeles, California; Bobrick Washroom Equipment Company, Scarborough, Ontario; Bobrick Washroom Equipment Pty. Ltd., Australia; and Bobrick Washroom Equipment Limited, United Kingdom.

continued . . .

The illustrations and descriptions herein are applicable to production as of the date of this Technical Data Sheet.
The manufacturer reserves the right to, and does from time to time, make changes and improvements in designs and dimensions.

Revised 11/16/16 Printed in U.S.A.
© 2016 by Bobrick Washroom Equipment, Inc.

INSTALLATION INSTRUCTIONS

BOBRICK SURFACE-MOUNTED SOAP DISPENSER

1. Install dispenser near or directly above sink to allow wet hands to drip into sink.
2. Allow sufficient space above dispenser to exchange cartridges easily.
3. Recommended installation height: 100 – 110 cm (39" - 43") (measured from floor to bottom of dispenser).
4. For installation please follow instructions down below:

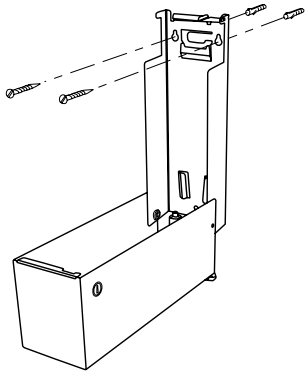

1. Mount dispenser to wall using enclosed screws and wall plugs.

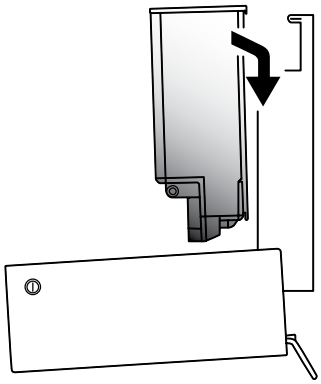

2. Insert plastic container into dispenser.

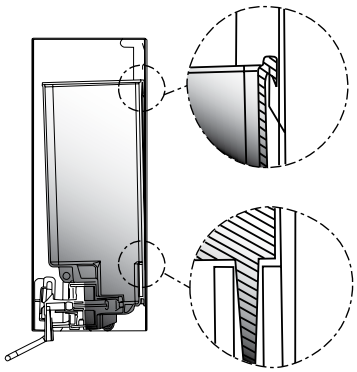

3. Ensure both top and bottom of container are correctly seated in dispenser.

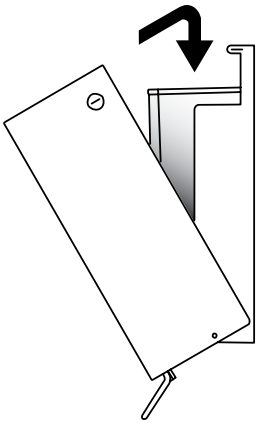

4. Replace dispenser cover.

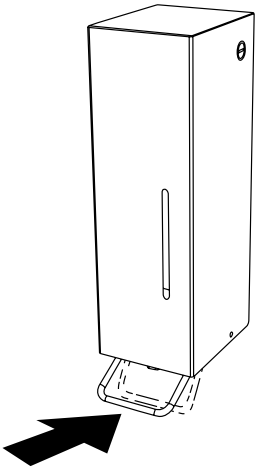

5. Press lever several times to prime pump.

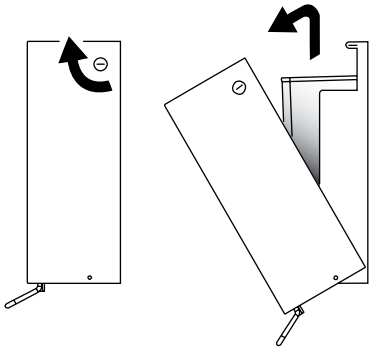

A. To change cartridge: open dispenser.

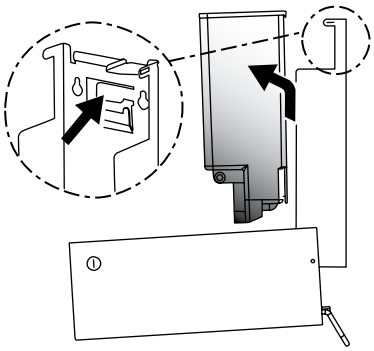

B. Press locking latch and lift cartridge up and out.

© 2016 by Bobrick Washroom Equipment, Inc.
B-26617 r11/16/16 Printed in U.S.A.

In the U.S.A.: BOBRICK WASHROOM EQUIPMENT, INC.
200 Commerce Drive, Clifton Park, New York 12065-1350 • Tel: 518/877-7444 • FAX: 518-877-5029
6901 Tujunga Avenue, North Hollywood, California 91605-5882 • Tel: 818-982-9600 • FAX: 818-503-1102
or email: customerservice@bobrick.com

In Canada: BOBRICK WASHROOM EQUIPMENT COMPANY
45 Rolark Drive, Scarborough, Ontario M1R 3B1 • Fax: (877) 423-8555