BOBRICK

Technical Data

HEAVY-DUTY CLOTHES HOOK WITH CONCEALED MOUNTING

B-2116



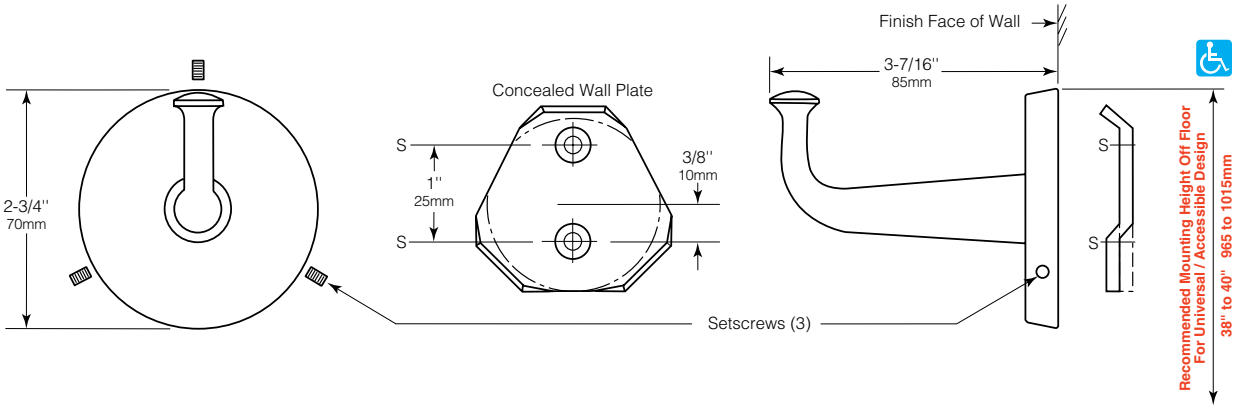

MATERIALS:

Hook and Flange — One-piece brass casting with satin nickel-plated finish. Withstands 300-lb (136-kg) downward pull if properly installed. Secured to concealed wall plate with three stainless steel setscrews.

Concealed Wall Plate — 12-gauge (2.7mm) case hardened steel.

INSTALLATION:

Secure wall plate to wall with two sheet-metal screws, furnished by manufacturer, at points indicated by an *S*. For plaster or dry wall construction, provide concealed backing to comply with local building codes, then secure mounting plate with screws furnished. For other wall surfaces, provide fiber plugs or expansion shields for use with screws furnished, or provide toggle bolts or expansion bolts. Secure hook to wall plate by tightening three stainless steel setscrews in flange.

SPECIFICATION:

Heavy-duty clothes hook with concealed mounting shall be one-piece brass casting with satin nickel-plated finish. Hook shall be secured to a concealed wall plate with three stainless steel setscrews. Hook shall withstand 300-lb (136-kg) downward pull when properly installed.

Heavy-Duty Robe Hook With Concealed Mounting shall be Model B-2116 of Bobrick Washroom Equipment, Inc., Clifton Park, New York; Jackson, Tennessee; Los Angeles, California; Bobrick Washroom Equipment Company, Scarborough, Ontario; Bobrick Washroom Equipment Pty. Ltd., Australia; and Bobrick Washroom Equipment Limited, United Kingdom.

The illustrations and descriptions herein are applicable to production as of the date of this Technical Data Sheet.
The manufacturer reserves the right to, and does from time to time, make changes and improvements in designs and dimensions.

Revised 6/30/15 Printed in U.S.A.
© 2015 by Bobrick Washroom Equipment, Inc.