BOBRICK

Technical Data

SURFACE-MOUNTED MULTI-ROLL TOILET TISSUE DISPENSER

B-2888



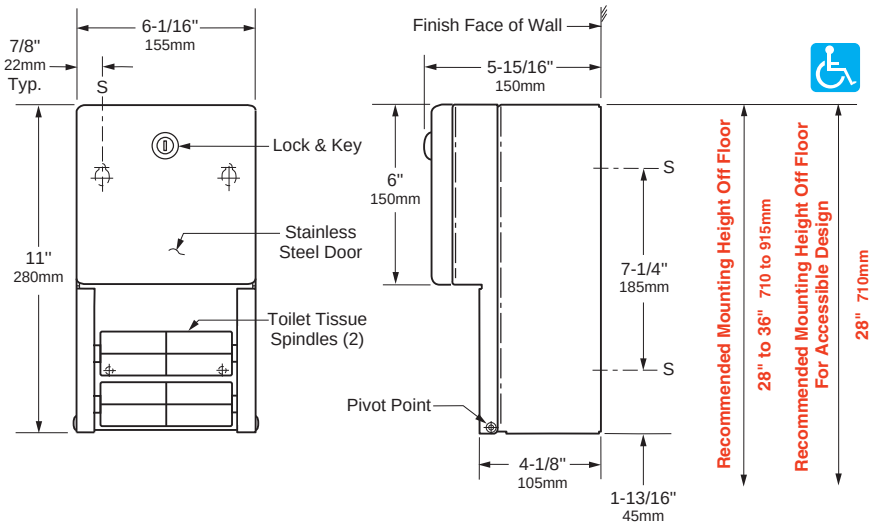

MATERIALS:

Cabinet — 18-8, type-304, 22-gauge (0.8mm) stainless steel. All-welded construction. Exposed surfaces have satin finish.

Door — 18-8, type-304, 22-gauge (0.8mm) stainless steel with 18-gauge (1.2mm) stainless steel door frame. Exposed surfaces have satin finish. Front of door is drawn, one-piece, seamless construction. Secured to cabinet with two rivets. Equipped with a tumbler lock keyed like other Bobrick washroom accessories.

Dispensing Mechanism, Inner Housing and Cam — 18-8, type-304, 18-gauge (1.2mm) stainless steel.

Spindles (2) — Heavy-duty, one-piece, molded ABS. Theft-resistant. Retained in dispensing mechanism when door is locked.

OPERATION:

Unit holds two standard-core toilet tissue rolls up to 5-1/4" (133mm) diameter (1800 sheets). Tissue rolls are loaded and locked into dispensing mechanism. Extra roll automatically drops in place when bottom roll is depleted. Depleted rolls can only be removed after unlocking door.

INSTALLATION:

For partitions with particleboard or other solid core, secure with four #10 x 5/8" (4.8 x 16mm) sheet-metal screws (not furnished) at points indicated by an *S*, or provide through-bolts, nuts, and washers.

For hollow-core metal partitions, provide solid backing into which sheet-metal screws can be secured. If two units are installed back-to-back, then provide threaded sleeves and machine screws for the full thickness of partition.

For plaster or dry wall construction, provide concealed backing to comply with local building codes, then secure unit with sheet-metal screws.

For other wall surfaces, provide fiber plugs or expansion shields for use with sheet-metal screws or provide 3/16" (5mm) toggle bolts or expansion bolts.

SPECIFICATION:

Surface-mounted multi-roll toilet tissue dispenser shall be type-304 stainless steel with all-welded construction, including dispensing mechanism, inner housing and cam; exposed surfaces shall have satin finish. Front of toilet tissue dispenser door shall be drawn, one-piece, seamless construction. Door shall be secured to cabinet with two rivets and equipped with a tumbler lock keyed like other Bobrick washroom accessories. Unit shall dispense two standard-core toilet tissue rolls up to 5-1/4" (133mm) diameter (1800 sheets). Extra roll shall automatically drop in place when bottom roll is depleted. Unit shall be equipped with two theft-resistant, heavy-duty, one-piece, molded ABS spindles.

Surface-Mounted Multi-Roll Toilet Tissue Dispenser shall be Model B-2888 of Bobrick Washroom Equipment, Inc., Clifton Park, New York; Jackson, Tennessee; Los Angeles, California; Bobrick Washroom Equipment Company, Scarborough, Ontario; Bobrick Washroom Equipment Pty. Ltd., Australia; and Bobrick Washroom Equipment Limited, United Kingdom.

The illustrations and descriptions herein are applicable to production as of the date of this Technical Data Sheet.
The manufacturer reserves the right to, and does from time to time, make changes and improvements in designs and dimensions.

Revised 4/27/11 Printed in U.S.A.
© 2011 by Bobrick Washroom Equipment, Inc.