BOBRICK

Technical Data

SURFACE-MOUNTED SOAP DISH

B-680
B-6807

Specify Model Required: ☐ Model B-680 Bright polished stainless steel
☐ Model B-6807 Satin-finish stainless steel



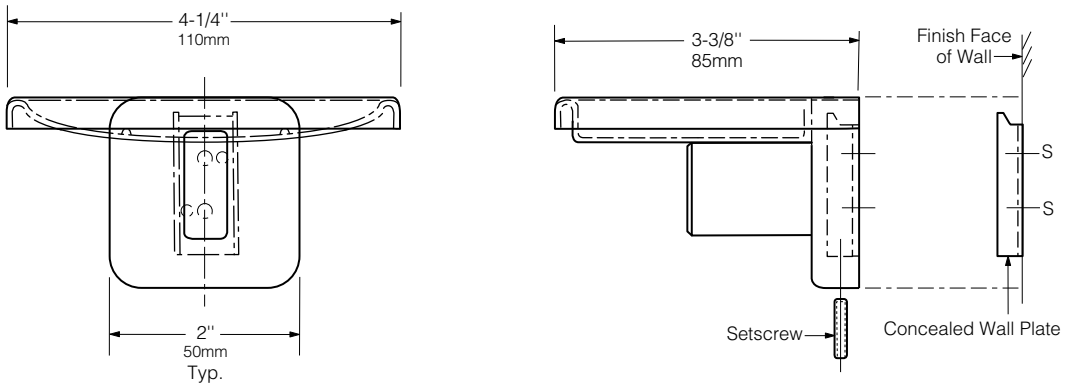

MATERIALS:

Flange and Support Arm — 18-8 S, type-304, 22-gauge (0.8mm) stainless steel. Concealed, 16-gauge (1.6mm) stainless steel mounting bracket. All-welded construction. Secured to wall plate with a stainless steel setscrew.

Concealed Wall Plate — 18-8 S, type-304, 16-gauge (1.6mm) stainless steel.

Soap Dish — 18-8 S, type-304, 22-gauge (0.8mm) stainless steel. Drawn, one-piece, seamless construction. Welded to the support arm. Two drain holes and two ridges to support bar of soap.

INSTALLATION:

To remove concealed wall plate from back of flange and mounting bracket, loosen setscrew. Mount wall plate so prongs are at top; secure with two sheet-metal screws, furnished by manufacturer, at points indicated by an *S*. Engage flange onto prongs of wall plate, then secure into position by tightening setscrew at bottom.

For plaster or dry wall construction, provide concealed backing to comply with local building codes, then secure unit with sheet-metal screws furnished. For other wall surfaces, provide fiber plugs or expansion shields for use with sheet-metal screws furnished, or provide 1/8" (3mm) toggle bolts or expansion bolts.

SPECIFICATION:

Surface-mounted soap dish shall be type-304 stainless steel with _____ (insert one: bright polished or satin) finish. Flange and support arm shall be 22 gauge (0.8mm) and equipped with a concealed, 16-gauge (1.6mm) mounting bracket that is secured to a concealed, 16-gauge (1.6mm) wall plate with a stainless steel setscrew. Drawn, one-piece, seamless, 22-gauge (0.8mm) soap dish shall be welded to the support arm and shall have two drain holes and two soap-support ridges. Manufacturer's service and parts manual shall be provided to the building owner/manager upon request.

Surface-Mounted Soap Dish shall be Model _____ (insert model number) of Bobrick Washroom Equipment, Inc., Clifton Park, New York; Jackson, Tennessee; Los Angeles, California; Bobrick Washroom Equipment Company, Scarborough, Ontario; Bobrick Washroom Equipment Pty. Ltd., Australia; and Bobrick Washroom Equipment Limited, United Kingdom.

The illustrations and descriptions herein are applicable to production as of the date of this Technical Data Sheet.
The manufacturer reserves the right to, and does from time to time, make changes and improvements in designs and dimensions.

Revised 5/06 R/A, S/C Printed in U.S.A.
© 2006 by Bobrick Washroom Equipment, Inc.